SZE = utjecaj oba pola

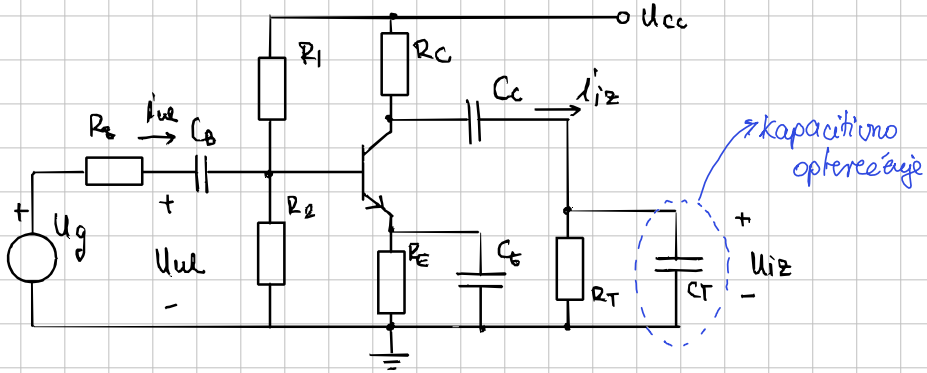

→ polovi su vezani ili za T

ili za kond koji su na putu propagiranog signala i povezani s masom

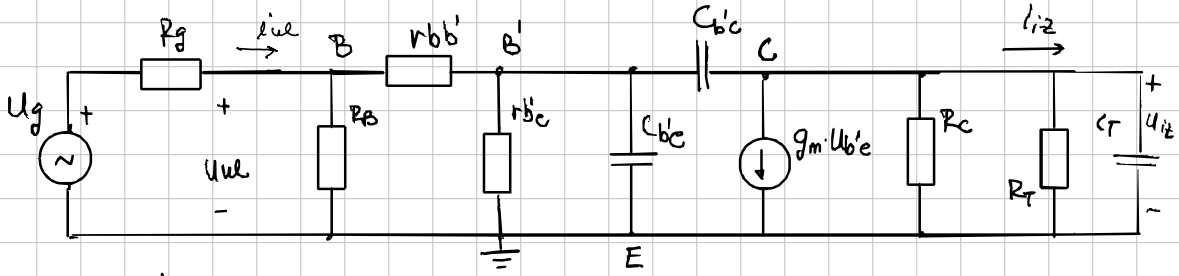

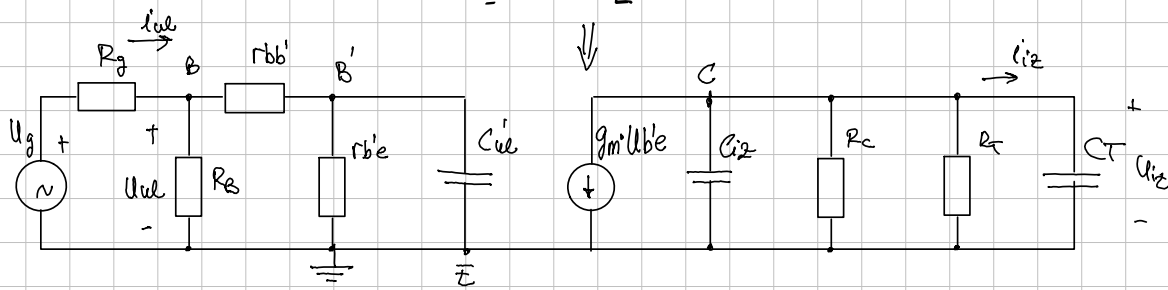

Kapacitet izlaznog kruga: $C'_{iz} = C_{iz} + C_T = C_{b'c}\frac{K-1}{K} + C_T \approx C_{b'c} + C_T$

→ radi se o SZE: napon C i napon B → U_{CE} i U_{BE} su protufazni

$K \approx -100$

Vremenska konstanta izlaznog kruga $\tau_{iz} = \frac{1}{\omega_{iz}} = (R_c \parallel R_T)\, C'_{iz}$

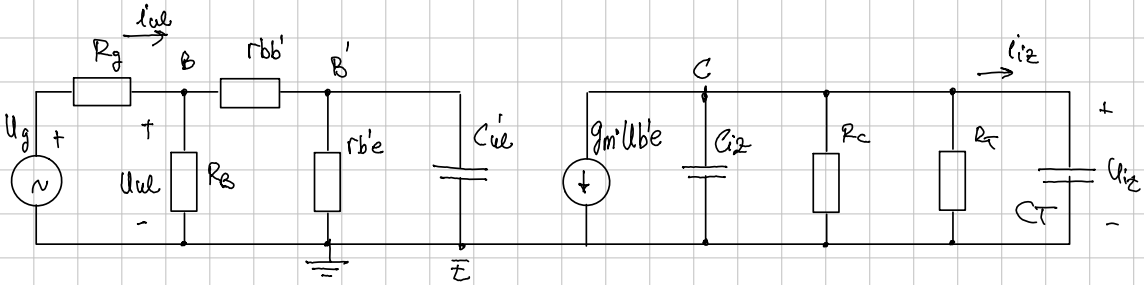

kada određujemo karakt na visokim frekv kao prvo mi moramo znati: kako djeluju pojedini kapaciteti

kako izgleda frekv karak !

→ na srednjim frekv. (svi kondenzatori odspajaju)

$$A_{v0} = -g_m (R_C \parallel R_T) \frac{r_{b'e}}{r_{bb'} + r_{b'e}}$$

→ Vremenske konst. koje određuju pojedini kapaciteti (drugi se kapacitet odspaja)

• NA VISOKIM FREKV!

$$\tau_{ul} = (r_{bb'} \parallel r_{b'e}) \cdot C_{ul} \qquad \tau_{iz} = (R_C \parallel R_T) \cdot C_{iz}'$$

▸ Gornja granična frekv: $\omega_g = \min\{\omega_{ul}, \omega_{iz}\} = \min\left\{\frac{1}{\tau_{ul}}, \frac{1}{\tau_{iz}}\right\}$! najmanja !

UVJET: → prva sljedeća mora biti barem 4 puta dalje od one koju mi želimo proglasiti ω_g → dominantni pol

AKO NE PROCJENA: $\omega_g \approx \frac{1}{\tau_{ul} + \tau_{iz}}$, općenito: $\omega_g \approx \frac{1}{\sum \tau_i}$

Primjer 5.5)

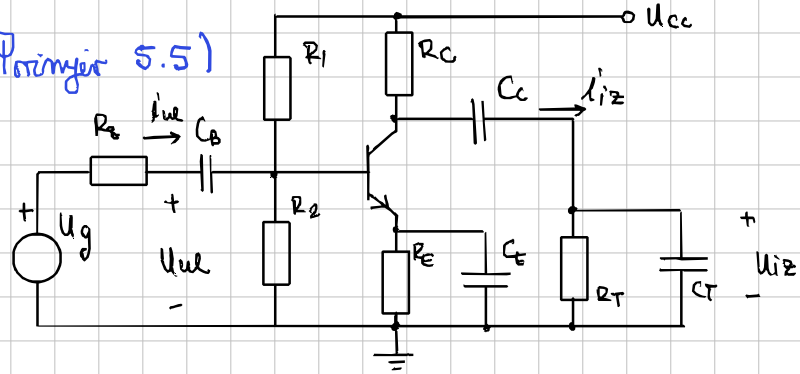

$U_{CC} = 15V$

$R_g = 500\Omega$

$C_B = 10\mu F$

$R_1 = 30k\Omega$

$R_2 = 11k\Omega$

$R_C = 2k\Omega$ $\quad R_E = 1k\Omega$ $\quad R_T = 1{,}2k\Omega$ $\quad U_T = 25mV$

$C_C = 3\mu F$ $\quad C_E = 100\mu F$ $\quad \beta = 100 = h_{fe}$ $\quad U_\gamma = 0{,}7$ $\quad r_{bb'} = 50\Omega$

$C_{b'c} = 80pF$ $\quad C_{b'e} = 2pF$

a) $C_T = 0$

$A_{v0} = ?$ $\quad \omega_g = ?$

b) $C_T = 100pF$

Statika

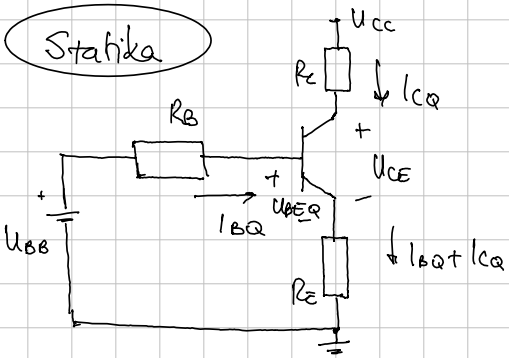

$R_B = R_1 \| R_2 = 8048.78\Omega$

$U_{BB} = \frac{R_2}{R_1+R_2} \cdot U_{CC} = 4{,}024V$

$-U_{BB} + R_B \cdot I_{BQ} + U_{BEQ} + I_{BQ}(1+\beta)R_E = 0$

$I_{BQ}(R_B + (1+\beta)R_E) = U_{BB} - U_{BEQ}$

$I_{BQ} = \frac{U_{BB} - U_{BEQ}}{R_B + (1+\beta)R_E} = 30.48\mu A$

$I_{CQ} = 3.05mA$

$-U_{CC} + R_C \cdot I_{CQ} + U_{CEQ} + I_{CQ} \cdot R_E = 0$

$U_{CEQ} = U_{CC} - I_{CQ}(R_C + R_E)$

$U_{CEQ} = 5.85V$

$\rightarrow r_{b'e} = \frac{U_T}{I_{BQ}} = \frac{25 \times 10^{-3}}{30.48 \times 10^{-6}}\Omega \Rightarrow \boxed{r_{b'e} = 820.21\Omega}$

$g_m = \frac{I_{CQ}}{U_T} = \frac{\beta \cdot I_{BQ}}{U_T} = \beta \cdot \frac{1}{r_{be}} \Rightarrow \boxed{g_m = 0.122 \frac{A}{V}}$

Dinamika

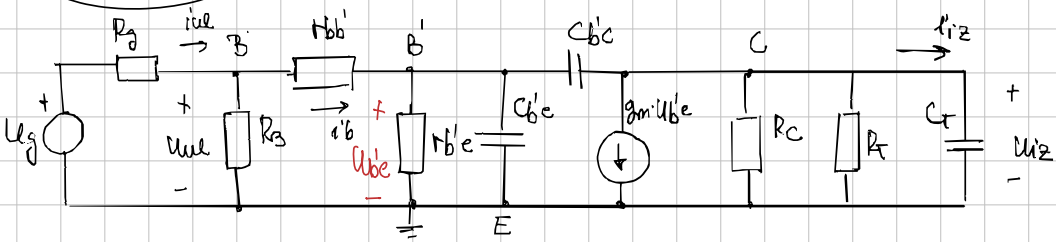

$r_{ce} = \infty$

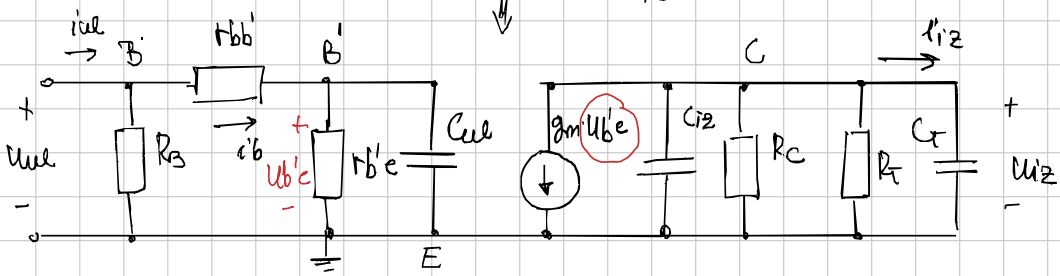

$$C_{ul} = C_{b'e} + C_{b'c}(1-K) \qquad C_{iz} = C_{b'c}\frac{K-1}{K} \approx C_{b'c}$$

$$A_v(j\omega) = A_{v0} \cdot \frac{1}{\left(1+j\frac{\omega}{\omega_{ul}}\right)} \cdot \frac{1}{\left(1+j\frac{\omega}{\omega_{iz}}\right)}$$

A_{v0} → dobijemo odspojanjem svih kond koji djeluju na visokim frekv.

$$A_{v0} = \frac{u_{iz}}{u_{ul}} = \frac{u_{iz}}{u_{b'e}} \cdot \frac{u_{b'e}}{u_{ul}}$$

→ $u_{iz} = -g_m \cdot u_{b'e}(R_C \parallel R_T)$ * odspojili smo C-ove!

→ $u_{ul} = r_{bb'} \cdot i_b + u_{b'e} = i_b \cdot (r_{bb'} + r_{b'e})$

→ $u_{b'e} = i_b \cdot r_{b'e}$

$$A_{v0} = \frac{-g_m \cdot \cancel{u_{b'e}}(R_C \parallel R_T)}{\cancel{u_{b'e}}} \cdot \frac{\cancel{i_b} \cdot r_{b'e}}{(r_{bb'} + r_{b'e})\cancel{i_b}} = \underbrace{-g_m \cdot (R_C \parallel R_T)}_{K} \cdot \frac{r_{b'e}}{r_{bb'} + r_{b'e}}$$

$$\boxed{A_{v0} = \dots = -86.24} \Rightarrow K = -g_m(R_C \parallel R_T) = -91.5$$

$$C_{ul} = 50 \times 10^{-12} + 2 \times 10^{-12}(1+92) \qquad C_{iz} = C_{b'c}\frac{-87}{-86} = 2.023\,pF$$

$$\boxed{C_{ul} = 237\,pF} \qquad \boxed{C_{iz} \approx C_{b'c} = 2\,pF}$$

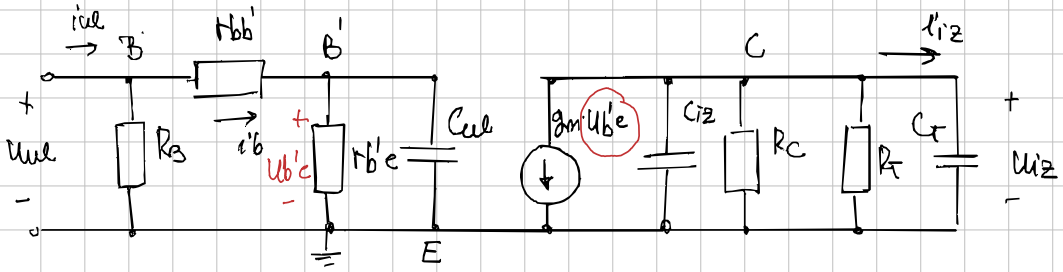

$$\omega_{ul} = ? = \frac{1}{\tau_{ul}} = \frac{1}{C_{ul}\cdot(r_{b'e} \parallel r_{bb'})} = 89{,}53\cdot 10^6 \text{ rad/s}$$

(K.S. ulaz)

$$f_{ul} = \frac{\omega_{ul}}{2\pi} = 5.58 \text{ MHz}$$

PRVI SLUČ

a) $C_T = 0$

$$\omega_{iz} = ? = \frac{1}{\tau_{iz}} = \frac{1}{C_{iz}\cdot(R_C \parallel R_T)} \longrightarrow \omega_{iz} = 667\times 10^6 \text{ rad/s}$$

(K.S. ul. → $u_{b'e} = 0$ → ne postoji strujni izvor)

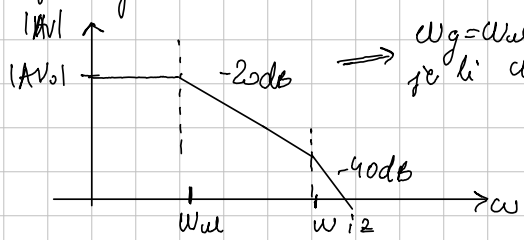

$\omega_g = \omega_{ul}$? je li $\omega_{iz} \geq 4\omega_{ul}$

(1)

→ $f_{iz} = \dots = 106.1$ MHz

⇒ $\omega_{iz} \gg \omega_{ul}$ ✓

vrijedi da je $\omega_g = \omega_{ul}$ ↳ $\boxed{f_g = f_{ul} = 5.58 \text{ MHz}}$

($f_{iz} > f_{ul}$)

za slučaj $C_T = 0$

DRUGI SLUČ.

b) $C_T = 100\,pF$ ⇒ $\omega_{iz} = \dfrac{1}{C'_{iz}(R_C \parallel R_T)} = \dfrac{1}{(C_{iz}+C_T)(R_C \parallel R_T)} = \dots = 13.07\times 10^6$ rad/s

$C'_{iz} = C_{iz} + C_T$ (paralelo)

(2)

↳ $f_{iz} = 2.08$ MHz

ali f_{ul} je i dalje $f_{ul} = 5.58$ MHz

→ da bi bilokoje mogli proglasiti ω_g moraju biti 4x razmak → očito nije

⇒ APROKSIMACIJA: $\omega_g = \dfrac{1}{\sum \tau_i} = \dfrac{1}{\tau_{ul} + \tau_{iz}} = \dfrac{1}{\frac{1}{\omega_{ul}} + \frac{1}{\omega_{iz}}}$

$$\Longrightarrow \boxed{f_g = \frac{1}{\frac{1}{f_{ul}} + \frac{1}{f_{iz}}} = \dots = 1.52 \text{ MHz}}$$

za slučaj $C_T = 100\,pF$

→ ovo od prije:

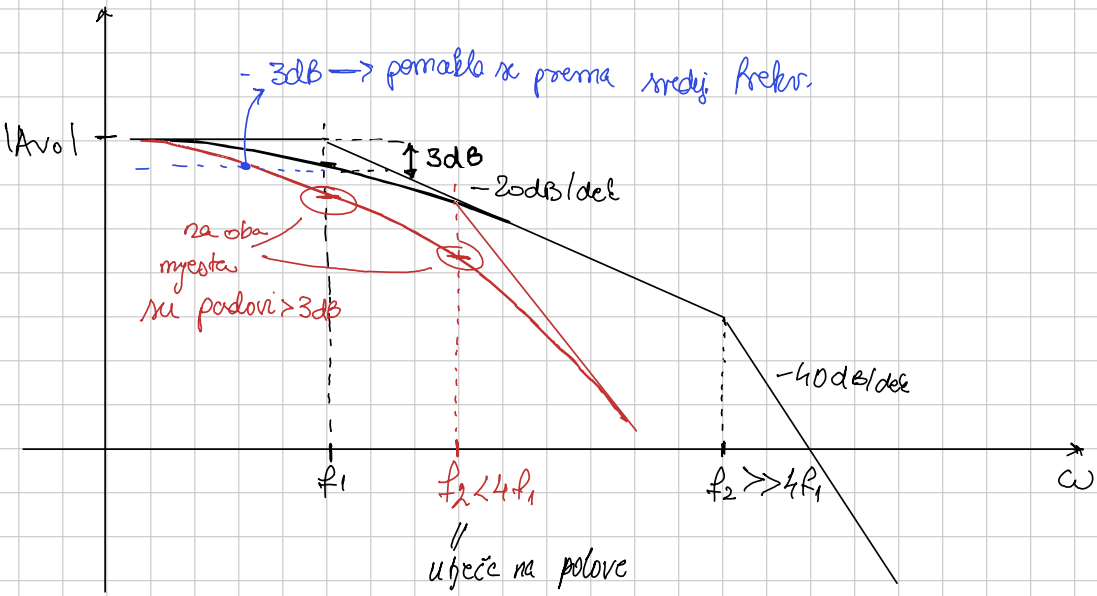
- 3dB → pomakla se prema sredj. frekv.
|Avo|
3dB
-20dB/dec
za oba mjesta su padovi > 3dB
-40dB/dec
f1
f2 < 4f1
f2 >> 4f1
ω
ufeč na polove